DS-2CD2763G0-IZS
6 MP IR Varifocal Dome Network Camera

Key Features

- 1/2.9" Progressive Scan CMOS
- 3072 × 2048@20 fps
- 2.8 to 12 mm varifocal lens
- Color: 0.01 Lux @ (F1.2, AGC ON), 0.018 Lux @ (F1.6, AGC ON), 0 Lux with IR
- H.265+, H.265, H.264+, H.264
- 120dB WDR
- BLC/3D DNR/ROI/HLC
- IP67, IK10
- Built-in micro SD/SDHC/SDXC card slot, up to 128 GB

Specifications

Camera	
Image Sensor	1/2.9" Progressive Scan CMOS
Min. Illumination	Color: 0.01 Lux @ (F1.2, AGC ON),0.018 Lux @ (F1.6, AGC ON), 0 Lux with IR
Shutter Speed	1/3 s to 1/100,000 s
Slow Shutter	Yes
Day & Night	IR Cut Filter
Digital Noise Reduction	3D DNR
WDR	120dB
3-Axis Adjustment	Pan: 0° to 355°, tilt: 0° to 75°, rotate: 0° to 355°
Lens	
Focal Length	2.8 to 12 mm
Lens Type	Motorized
Aperture	F1.6
Focus	Auto
FOV	Horizontal field of view: 88° to 27° Vertical field of view: 56° to 18° Diagonal field of view: 110° to 33°
Lens Mount	Φ14
IR	
IR Range	Up to 30 m
Wavelength	850nm
Compression Standard	
Video Compression	Main stream: H.265/ H.264 Sub-stream: H.265/H.264/MJPEG Third stream: H.265/H.264
H.264 Type	Main Profile/High Profile
H.264+	Main stream supports
H.265 Type	Main Profile
H.265+	Main stream supports
Video Bit Rate	32 Kbps to 16 Mbps
Audio Compression	G.711/G.722.1/G.726/MP2L2/PCM
Audio Bit Rate	64Kbps(G.711)/16Kbps(G.722.1)/16Kbps(G.726)/32-192Kbps(MP2L2)
Smart Feature-set	
Behavior Analysis	Line crossing detection, intrusion detection
Face Detection	Yes
Region of Interest	Support 1 fixed region for main stream and sub-stream
Image	
Max. Resolution	3072 × 2048
Main Stream	50Hz: 20 fps (3072 × 2048, 3072 × 1728, 2944 × 1656), 25 fps (2560 × 1440, 1920 × 1080, 1280 × 720) 60Hz: 20 fps (3072 × 2048, 3072 × 1728, 2944 × 1656), 30fps (2560 × 1440, 1920 × 1080, 1280 × 720)
Sub-Stream	50Hz: 25fps (640 × 480, 640 × 360, 320 × 240) 60Hz: 30fps (640 × 480, 640 × 360, 320 × 240)

Third Stream	50Hz: 25fps (1280 × 720, 640 × 360, 352 × 288) 60Hz: 30fps (1280 × 720, 640 × 360, 352 × 240)
Image Enhancement	BLC/3D DNR/HLC
Image Settings	Rotate mode, saturation, brightness, contrast, sharpness and white balance adjustable by client software or web browser
Target Cropping	No
Day/Night Switch	Day/Night/Auto/Schedule/Triggered by Alarm In
* Note: When the main stream resolution is 2944 × 1656 and above, max frame rate is 20 fps for all streams.	
Network	
Network Storage	Support Micro SD/SDHC/SDXC card (128G), local storage and NAS (NFS,SMB/CIFS), ANR
Alarm Trigger	Motion detection, video tampering, network disconnected, IP address conflict, illegal login, HDD full, HDD error
Protocols	TCP/IP, ICMP, HTTP, HTTPS, FTP, DHCP, DNS, DDNS, RTP, RTSP, RTCP, PPPoE, NTP, UPnP, SMTP, SNMP, IGMP, 802.1X, QoS, IPv6, Bonjour
General Function	One-key reset, anti-flicker, three streams, heartbeat, password protection, privacy mask, watermark, IP address filter
Firmware Version	V5.5.80
API	ONVIF (PROFILE S, PROFILE G), ISAPI
Simultaneous Live View	Up to 6 channels
User/Host	Up to 32 users 3 levels: Administrator, Operator and User
Client	iVMS-4200, Hik-Connect, iVMS-5200, iVMS-4500
Web Browser	Plug-in required live view: IE8+, Chrome 41.0-44, Firefox 30.0-51, Safari 8.0-11 Plug-in free live view: Chrome 45.0+, Firefox 52.0+
Interface	
Audio	1 input (line in, 3.5 mm), 1 output (line out, 3.5 mm), mono sound
Alarm	1 input, 1 output (max. 12 VDC, 30 mA), terminal block
Communication Interface	1 RJ45 10M/100M self-adaptive Ethernet port
Video Output	1Vp-p composite output (75 Ω) (For adjustment only)
On-board storage	Built-in Micro SD/SDHC/SDXC slot, up to 128 GB
SVC	H.264 and H.265 encoding support
Reset Button	Yes
Audio	
Environment Noise Filtering	Yes
Audio Sampling Rate	8kHz/16kHz/32kHz/44.1kHZ/48kHz
General	
Operating Conditions	-30 °C to +60 °C (-22 °F to +140 °F), Humidity 95% or less (non-condensing)
Power Supply	12 VDC ± 25%, PoE (802.3af) Terminal block for DC input
Power Consumption and Current	12 VDC, 0.8A, max. 10W PoE (802.3af, 36V to 57V), 0.4A to 0.2A, max. 12W
Protection Level	IP67, IK10
Material	Metal
Dimensions	Φ153.4 × 133.1 mm (Φ6" × 5.2")
Weight	Camera: 1287 g (2.8 lb.)

Available Model:

DS-2CD2763G0-IZS (2.8 to 12 mm)

Dimensions

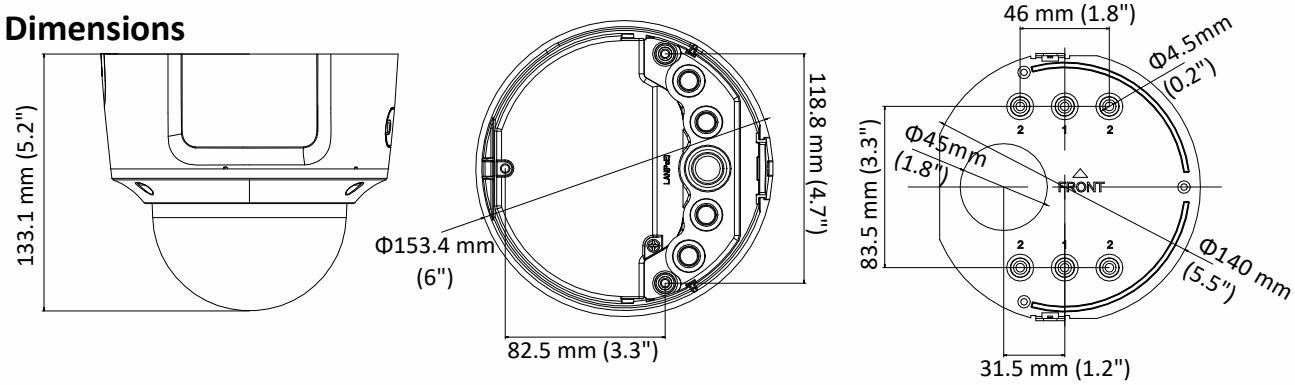

Accessories

DS-1471ZJ-155

Pendant Mount

DS-1473ZJ-155

Wall Mount

DS-1475ZJ-SUS

Vertical Pole Mount

DS-1476ZJ-SUS

Corner Mount

DS-1227ZJ-DM37

In-ceiling Mount

Distributed by

Headquarters
No.555 Qianmo Road, Binjiang District,
Hangzhou 310051, China
T +86-571-8807-5998
overseasbusiness@hikvision.com

Hikvision USA
T +1-909-895-0400
sales.usa@hikvision.com

Hikvision Europe
T +31-23-55-42-770
info.eu@hikvision.com

Hikvision Middle East
T +971-4-8816086
salesme@hikvision.com

Hikvision Russia
T +7-495-669-67-99
saleru@hikvision.com

Hikvision India
T +91-22-28469900
sales@pramahikvision.com

Hikvision Italy
T +39-0438-6902
info.it@hikvision.com

Hikvision France
T +33(0)1-85-330-450
info.fr@hikvision.com

Hikvision Spain
T +34-91-737-16-55
info.es@hikvision.com

Hikvision Poland
T +48-22-460-01-50
poland@hikvision.com

Hikvision UK
T +01628-902140
support.uk@hikvision.com

Hikvision Singapore
T +65-6684-4718
sg@hikvision.com

Hikvision Oceania
T +61-2-8599-4233
salesau@hikvision.com

Hikvision Canada
T +1-909-895-0400
sales.usa@hikvision.com

Hikvision Korea
T +82-31-731-8841
sales.korea@hikvision.com

Hikvision Brazil
T +55 11 3318-0050
Latam.support@hikvision.com

Hikvision Africa
T +27 (10) 0351172
sale.africa@hikvision.com

Hikvision Hong Kong
T +852-2151-1761

05058020190429

© Hikvision Digital Technology Co., Ltd. 2019 | Data subject to change without notice |